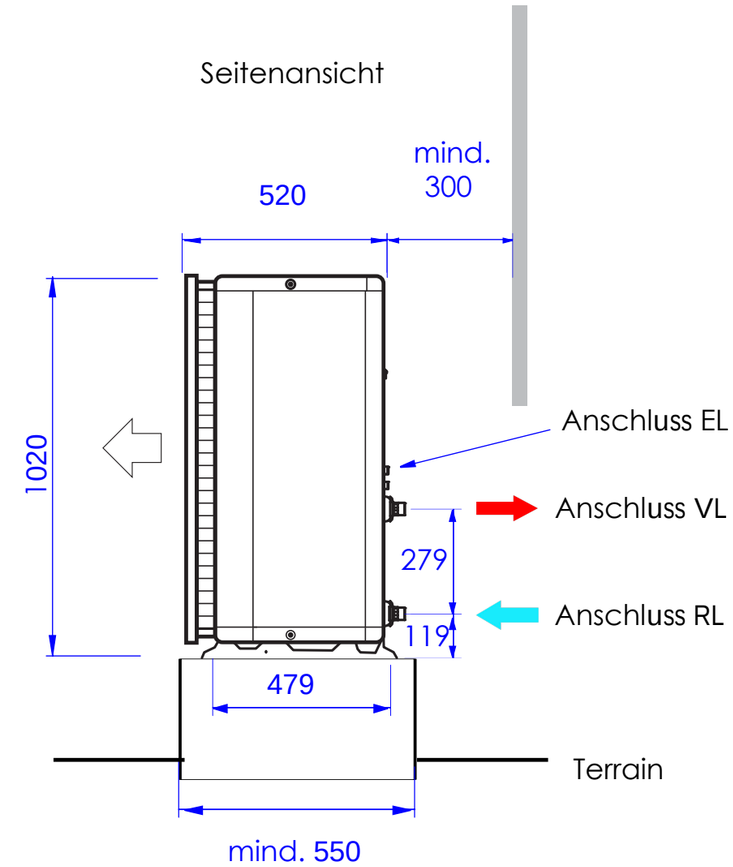

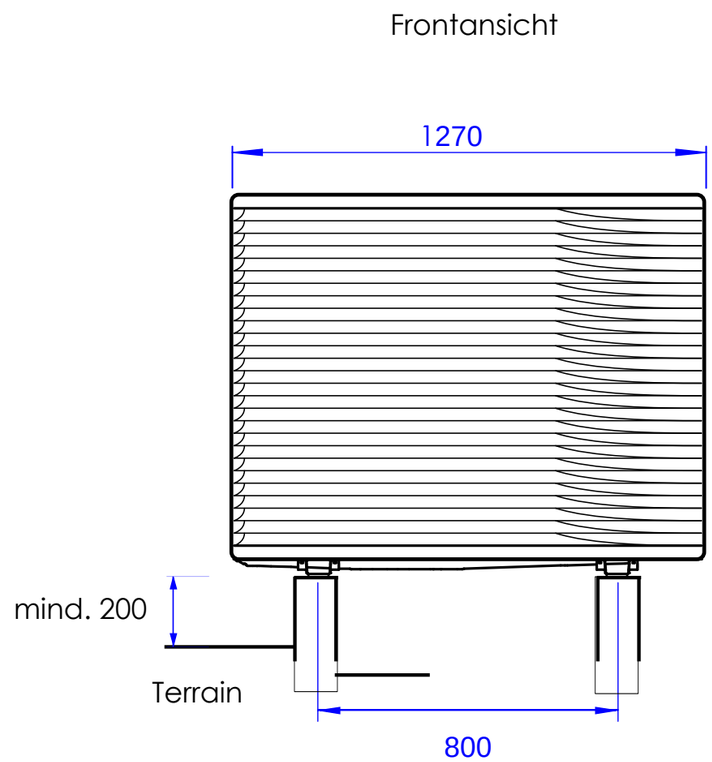

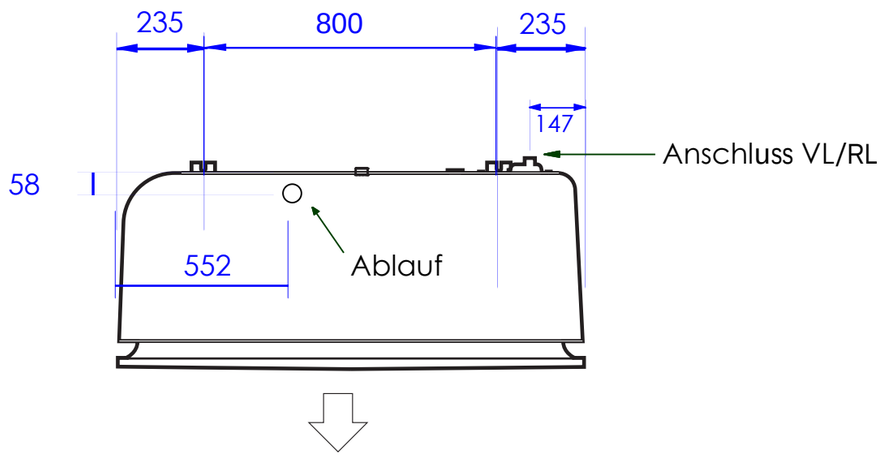

OPTIMAHEAT				
Betonsockel - Altherma 3 MT / HT EPRA08-18				